Product Data Sheet

Sensors and Actuator

- Product description M12 Female Angled A Code 3 Pin Pur Shielded 3x0.34 Black
- MPN-2412-67-153-334-XXXX
- Series –M12 A coded

Illustration



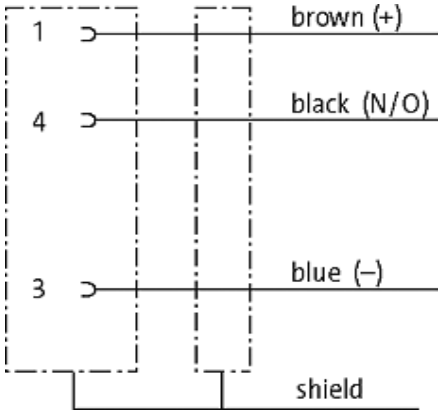

-Colour customization available based on MOQ

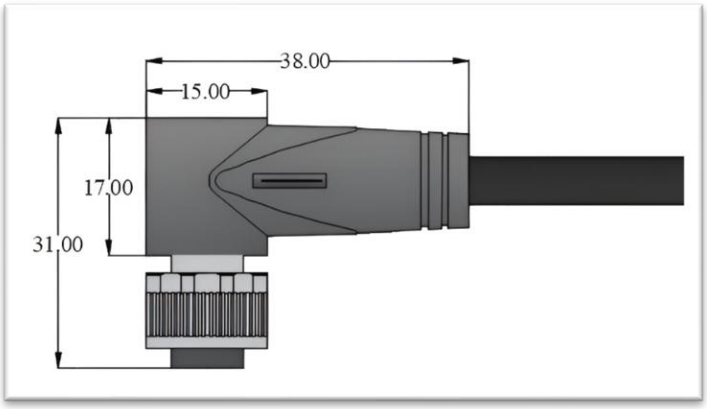

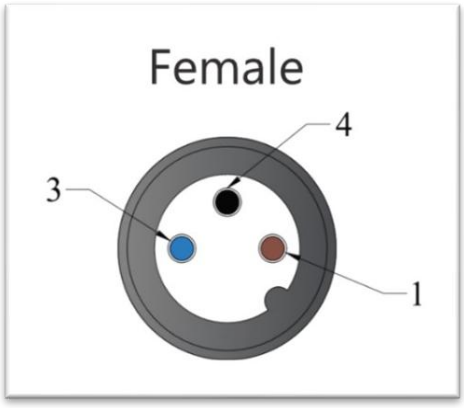

Product may differ from image

Product Datasheet Rev.No-01 Effective date-13-02-2026

The information in this product PDF has been complied with the utmost care
Liability for the correctness completeness and topicality of the information is restricted to gross negligence.

Office Address: Ground Floor Plot No, G-8/7, Ranjangaon Industrial Area Shirur Road Karegaon, Ranjangaon MIDC, Pune Maharashtra-412220 India. Contact- info@leiindias.com; sales@leiindias.com; www.leiindias.com;+91-7448296005; +91-020-66205306 GST No-27AACCL5628E1ZL
Factory Address: 2347/B Wagholi Warehouse, Pune Nagar Road, Wagholi, Pune- 412207, Maharashtra, India.

Product Data Sheet

Sensors and Actuator

Technical Data	
Operating voltage	300V AC/DC*
Rated Surge Voltage	2.5 kV
Operating current per contact AMP	Max. 4 A
Connection type head A	Female connector, M12 Angle, 3-pin, A coded
Connection type head B	Open end
Protection	IP67, IP68, IP69
Housing Material	TPU
Locking nut material	Brass, Nickel plated
LED display	No
Connector colour	Black
Tightening torque	0.6 Nm

Electrical Data	
Overvoltage category	II
Contact resistance	≤ 5 mΩ
Insulation resistance	≥ 100 mΩ
Test voltage	≥ 3000 V
Conductor material	Bare Cu litz wires
Max. conductor resistance	Max. 57 Ω/km (at 20 °c)
Nominal voltage	≤ 300 v

Mechanical Data	
Insertion/withdrawal cycles	≥ 100

Product properties		
Application	Actuator-sensor, gigabit ethernet & Profibus	
Partly UV-resistant	in accordance with DIN	EN ISO 4892-2-A
Flammability rating According to UL 94	HB	

The information in this product PDF has been complied with the utmost care
Liability for the correctness completeness and topicality of the information is restricted to gross negligence.

Office Address: Ground Floor Plot No, G-8/7, Ranjangaon Industrial Area Shirur Road Karegaon, Ranjangaon MIDC, Pune Maharashtra-412220 India. Contact- info@leiindias.com; sales@leiindias.com; www.leiindias.com;+91-7448296005; +91-020-66205306 GST No-27AACCL5628E1ZL
Factory Address: 2347/B Wagholi Warehouse, Pune Nagar Road, Wagholi, Pune- 412207, Maharashtra, India.

Product Data Sheet

Sensors and Actuator

General Data	
Standards	IEC-61076-2-101 (M12)
Mounting method	Inserted, tightened.
Pin Contact	CuZn
Housing contact	CuSn
Material (contact surface)	Au
Pollution Degree	3
Stripping length (jacket)	20 mm (If required)
Temperature range	-25…..+105°C

Cable Data	
Cable Type	PUR
Cable weight	49 g/m
Diameter (core)	3*0.34 mm².
AWG	similar to AWG 22
Material (wire isolation)	PP
Material property (wire isolation)	Halogen-, CFC-, cadmium-, silicone- and lead-free
Colour/numbering of wires	Brown, Blue, Black
Stranding combination	3 wires
Shield	Yes
Shielding	Tin braided
Optical shield covering	Min 85%
Material (jacket)	PUR
Outer-Ø (jacket)	6.20±0.2mm
Colour (jacket)	Black
Chemical resistance	good resistance to oil, gasoline and chemicals (EN 60811-404)
Thermal resistance	flame retardant UL 1581 Section 1090 (H), CSA FT2 / IEC 60332-2-2
Temperature range (fixed)	-40...+80 °C, (+105 °C. at max. 10 000 operating hours)
Temperature range (mobile)	-25...+80 °C, (+105 °C. at max. 10 000 operating hours)
Bend radius (fixed)	8× outer Ø
Bend radius (moving)	12× outer Ø
No. of bending cycles (C-track)	10 Mio. (25 °C)
Acceleration (C-track)	Max. 10 m/s

The information in this product PDF has been complied with the utmost care
Liability for the correctness completeness and topicality of the information is restricted to gross negligence.

Office Address: Ground Floor Plot No, G-8/7, Ranjangaon Industrial Area Shirur Road Karegaon, Ranjangaon MIDC, Pune Maharashtra-412220 India. Contact- info@leiindias.com; sales@leiindias.com; www.leiindias.com;+91-7448296005; +91-020-66205306 GST No-27AACCL5628E1ZL
Factory Address: 2347/B Wagholi Warehouse, Pune Nagar Road, Wagholi, Pune- 412207, Maharashtra, India.

Product Data Sheet

Sensors and Actuator

Torsion stress	±180°/m
No. of torsion cycles	max.2 Mio(25°c)
Torsion speed	35 cycle/min

Approvals
UL
CE
cULus
RoHS

Note: This product has been manufactured by the following Class-I, Class-II and class-III **IPC** standards

To understand the MPN please refer the below Table

2412-67-153-334-XXXX	
24	Series
12	M12 connector
6	Female
7	Angle
1	A code
5	PUR shielded cable-black
3	3 pole connector
3	3 core cable
34	0.34 mm^2 (Core size)
XXXX	Cable length as per customer requirement

The information in this product PDF has been complied with the utmost care
Liability for the correctness completeness and topicality of the information is restricted to gross negligence.

Office Address: Ground Floor Plot No, G-8/7, Ranjangaon Industrial Area Shirur Road Karegaon, Ranjangaon MIDC, Pune Maharashtra-412220 India. Contact- info@leiindias.com; sales@leiindias.com; www.leiindias.com;+91-7448296005; +91-020-66205306 GST No-27AACCL5628E1ZL
Factory Address: 2347/B Wagholi Warehouse, Pune Nagar Road, Wagholi, Pune- 412207, Maharashtra, India.